Integrated microfluidic platform for instantaneous flow

and localized temperature control

Cifeng Fang, Doojin Lee, Boris Stober, Gerald G. Fuller, and Amy Q. Shen
(Published in RSC Advances, RSC Advances, 5: 85620–85629, 2015.)

We developed an integrated microfluidic platform for instantaneous flow and localized temperature control. The platform consisted of a flow-focusing region for emulsion droplet production, a cross junction region embedded with a microheater for droplet trapping and localized temperature control by using an active feedback control system. The droplet trapping performance and trapping stability were also investigated. We further used thermotropic liquid crystal as the droplet phase to demonstrate the trapping and temperature control ability of the microfluidic platform. Our integrated platform offers the capability of manipulating non-contact, instantaneous flow with localized temperature control, which provides valuable tools for studying transient interfacial dynamics and various biological and industrial processes.

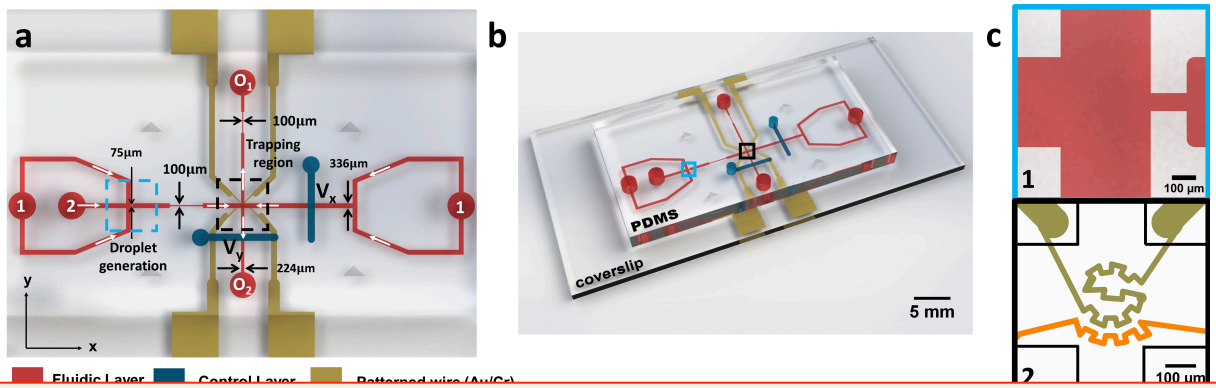

1Figure 1: Schematic of microfluidic tensiometer to measure dynamic interfacial tension of miscible fluids.

We envision that our integrated microfluidic platform gives great potentials to direct real-time flow and temperature control that is critical to characterize transient interfacial dynamics in miscible and immiscible liquid pairs, and in the dissolution of sessile drops, relevant to numerous technological and biological processes such as cleansing operations, on-chip cellular physiology studies, and on-chip rapid PCR applications.

Temperature controlled tensiometry using droplet microfluidics

Doojin Lee, Cifeng Fang, Aniket S. Ravan, Gerald G. Fuller, and Amy Q. Shen
(Lab on a Chip, 17: 717-726, 2017.)

We develop a temperature controllable microfluidic device for the accurate measurement of temperature dependent interfacial tensions between two immiscible liquids. A localized temperature control system is integrated with the microfluidic platform to maintain accurate temperature inside the device. The temperature uniformity and sensitivity are verified by both simulation and experimental results. Temperature dependent interfacial tensions are measured dynamically and rapidly relying on quantitative analysis of the deformation and retraction dynamics of droplets under extensional flow. Our microfluidic tensiometry offers the capability of measuring temperature dependent interfacial tensions with precise and systematical temperature control in the range of room temperature to 70°C, which is valuable for studying transient interfacial dynamics, interfacial reactions, and surfactant adsorption process.

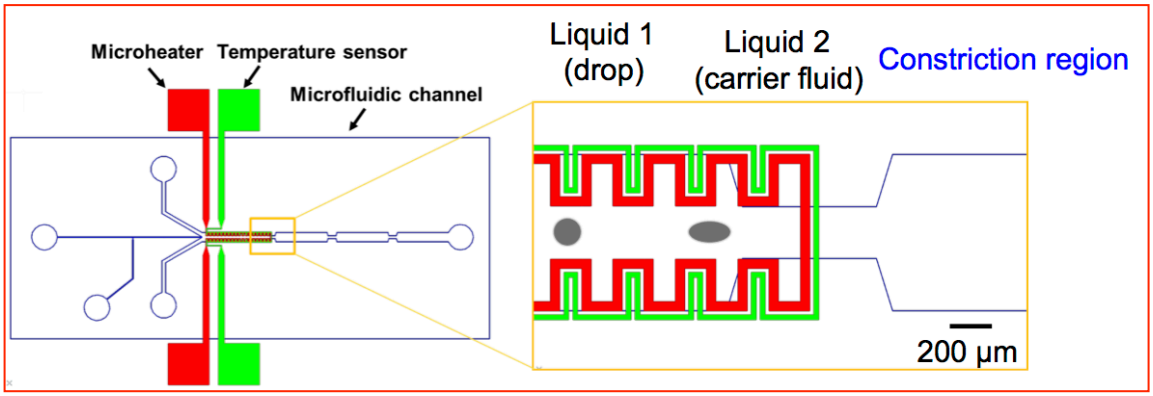

Figure: Schematic of the microfluidic tensiometer, with temperature control