OIST SEMINAR

Date: September 7th, 2017 (Thu)
Time: 2:00 pm – 3:00 pm
Venue: D015 (Lab1, Level D)
Speaker: Prof. M.S. Chong (University of Melbourne)

Skin-friction and vorticity fields in wall-bounded flows and the attached eddy hypothesis

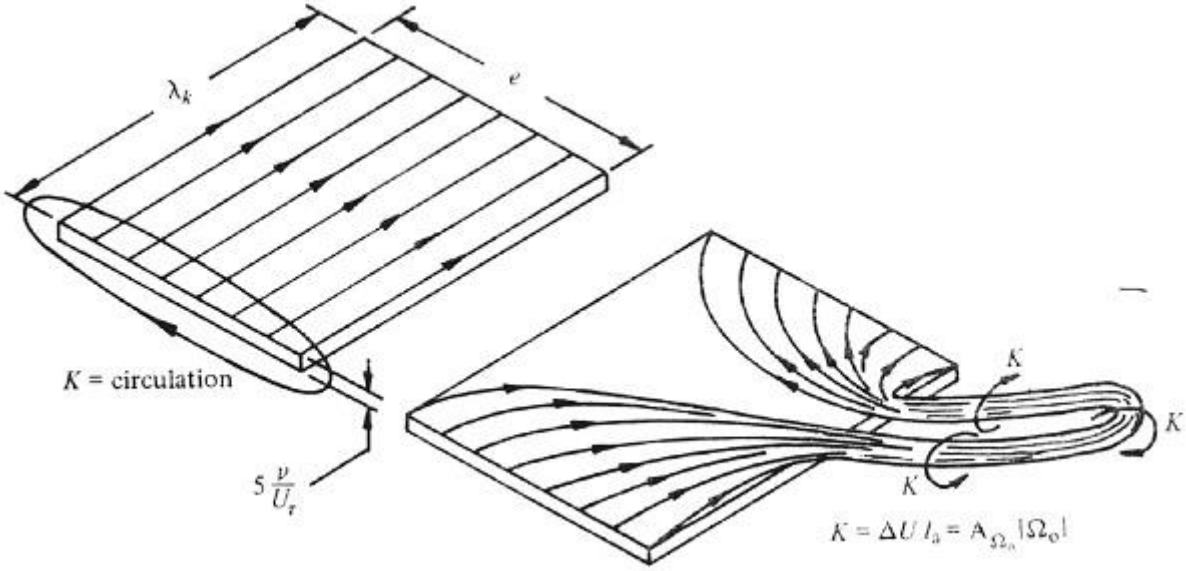

Abstract:
The invariants of the velocity gradient tensor have been used to study turbulent flow structures in order to extract information regarding the scales, kinematics and dynamics of these structures. These invariants cannot be used to study structures at a no-slip wall since they are all zero at the wall. However, the flow structures at the wall can be studied in terms of the invariants of the "no-slip tensor". Employing surface flow patterns generated using local solutions of the Navier-Stokes equations, the relationship between the surface skin-friction field and vorticity field will be explored. These local solutions, together with data from the Direct Numerical Simulations of channel flows, pipe flows and boundary layer flows may perhaps lead to a better model for the structure of attached eddies in wall bounded flows.

Contact information: Fluid Mechanics Unit
Kaori Egashira: (Tel) 098-966-8683 (e-mail) e-kaori@oist.jp